Instructions

Pump/Manifold Kits

311611F
ENG

To convert E-Flo® 4-Ball Piston Pumps to a different size lower.
For professional use only.

See page 2 for a list of available kits.

Important Safety Instructions
Read all warnings and instructions in this manual and in E-Flo Repair-Parts manual 311594. Save these instructions.

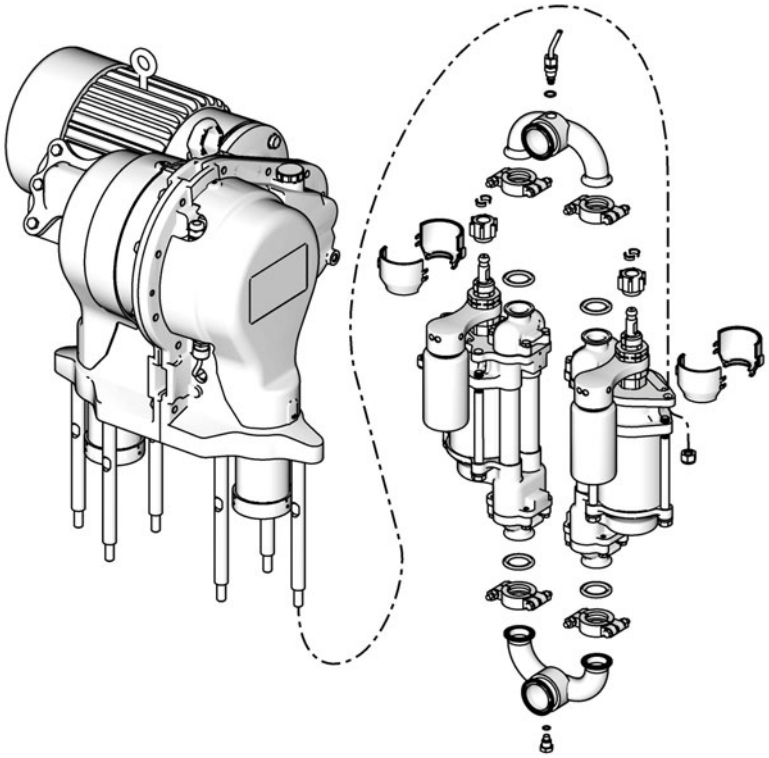

ti8720c

PROVEN QUALITY. LEADING TECHNOLOGY.

Kit Parts

Complete kits are available to convert from one size lower to another. See the table below for available kits.

Kit Part No.	Lower Part No.	Description
289553	24F417	750 cc, Chromex™
15J747	24F428	1000 cc, Chromex
15J748	24F436	1500 cc, Chromex
15J749	24F444	2000 cc, Chromex
16F420	24F418	750 cc, MaxLife®
15J750	24F429	1000 cc, MaxLife
15J751	24F437	1500 cc, MaxLife
15J752	24F445	2000 cc, MaxLife

NOTE: The kits include the following parts. Parts included in the kit are marked with an asterisk, for example (13*). Use all the new parts in the kit.

Ref. No.	Part No.	Description	Qty
13*	184128	COLLAR, coupling	4
14*	184059	NUT, coupling	2
15*	108683	NUT, lock, hex	6
16*	120351	GASKET, sanitary	4
17*	n/a	MANIFOLD	2
18*	120350	CLAMP, sanitary, 1.5	4
22*	24F428	LOWER, 1000 cc, Chromex cylinder; used in kit 15J747; see 3A0539 for lower parts information	2
	24F436	LOWER, 1500 cc, Chromex cylinder; used in kit 15J748; see 3A0539 for lower parts information	2
	24F444	LOWER, 2000 cc, Chromex cylinder; used in kit 15J749; see 3A0539 for lower parts information	2
	24F429	LOWER, 1000 cc, MaxLife cylinder; used in kit 15J750; see 3A0539 for lower parts information	2
	24F437	LOWER, 1500 cc, MaxLife cylinder; used in kit 15J751; see 3A0539 for lower parts information	2
	24F445	LOWER, 2000 cc, MaxLife cylinder; used in kit 15J752; see 3A0539 for lower parts information	2
	24F417	LOWER, 750 cc, Chromex cylinder; used in kit 289553; see 3A0539 for lower parts information	2
	24F418	LOWER, 750 cc, MaxLife cylinder; used in kit 16F420; see 3A0539 for lower parts information	2
41*	111316	O-RING; chemically resistant fluoro-elastomer	2
45*	n/a	PLUG, manifold	2

Parts designated n/a are not available separately.

Pressure Relief Procedure

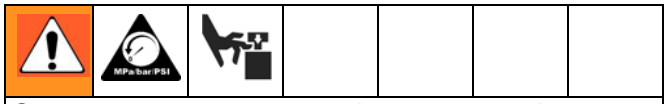

System pressure can cause the pump to cycle unexpectedly, which could result in serious injury from splashing or moving parts.

1. Set START/STOP switch to STOP.
2. Push in SECURE DISABLE switch.
3. Open the back pressure regulator and all fluid drain valves in the system, having a waste container ready to catch drainage. Leave open until you are ready to pressurize system again.
4. Check that pressure gauges on fluid supply and return lines read zero. If gauges do not read zero, determine cause and carefully relieve pressure by VERY SLOWLY loosening a fitting. Clear obstruction before pressurizing system again.

Flushing

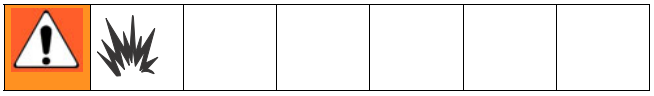

1. Follow **Pressure Relief Procedure**, page 2.
2. Supply the appropriate flushing material to the system.
3. Set pump to lowest possible fluid pressure, and start the pump.
4. Flush long enough to thoroughly clean the system.
5. Follow **Pressure Relief Procedure**, page 2.

Kit Installation

Disassembly

1. Flush the pump, see page 3.
2. Jog the motor to bring the lower on the side being repaired to the bottom of its stroke. This provides access to the coupling nut (14).
3. Relieve the pressure, see page 2.
4. Remove the 2-piece shield (72) by inserting a screwdriver straight into the slot, and using it as a lever to release the tab. Repeat for all tabs. **Do not** use the screwdriver to pry the shields apart.
5. See FIG. 1. Place a 3/4 in. wrench on the slider piston (9) flats (just above the coupling nut), to keep the slider piston/connecting rod from turning when you are loosening the coupling nut (14). Orient the wrench so it is braced against one of the tie rods (3). Applying excessive force to the slider piston/connecting rod can shorten the life of the lower pin bearing.
6. Using a 1-5/8 in. open-end wrench, unscrew the coupling nut (14) from the slider piston (9) and let it slide down onto the pump piston rod. Be careful not to lose the collars (13).
7. Repeat steps 2-6 for the other lower.
8. Shut off electrical power and allow the unit to cool.

10 Hold slider piston (9) flats with 3/4 in. wrench, and brace against tie rod (3).

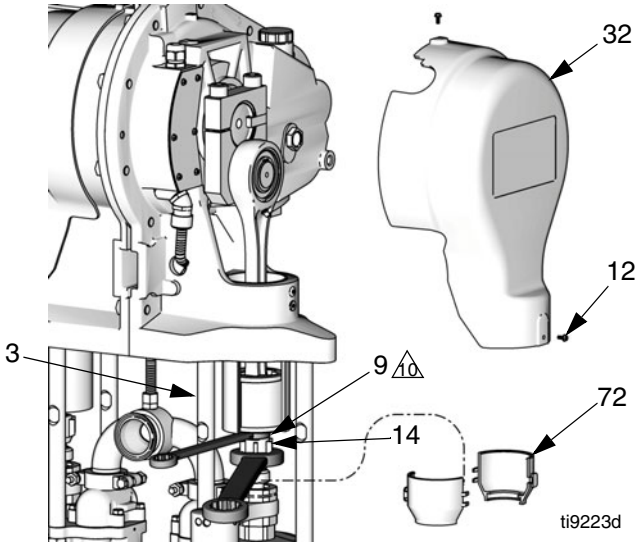

FIG. 1. Remove Coupling Nut

9. Disconnect the fluid inlet and outlet lines from the pump. Plug the ends to prevent fluid contamination.
10. See FIG. 2. *On pumps with a sensor circuit:* At the pump outlet manifold (17), loosen the transducer nut (M) and unscrew the adapter (42) from the manifold. Remove the transducer (25a) from the manifold port. Remove the existing o-ring (41) and discard.
11. Loosen the clamps (18) at the inlet and outlet manifolds (17). Remove the manifolds and gaskets (16).
12. Remove the coupling nut (14) and collars (13) from the piston rods (PR).
13. Unscrew the locknuts (15). Remove the lower (22). See your separate lower manual for repair instructions.

Reassembly

1. See FIG. 2. Install the coupling nut (14) on the lower's piston rod (PR).

2. Orient the lower (22) to the gear reducer (1) as shown. Position the lower on the tie rods (3). Screw the tie rod locknuts (15) onto the tie rods handtight.

3. Assemble the inlet and outlet manifolds (17) to the lower, using new gaskets (16) and clamps (18). Torque the clamps (18) to 15-20 ft-lb (21-27 N•m).

4. Torque the locknuts (15) to 50-60 ft-lb (68-80 N•m).

5. At the outlet manifold (17):

   a. *On pumps with a sensor circuit:* Install a new black o-ring (41) on the transducer (25a). Insert the transducer into the outlet manifold (17). Torque the adapter (42) first, then the nut (M) to 15-20 ft-lb (21-27 N•m).

   b. *On pumps without a sensor circuit:* Install a black o-ring (41) on the plug (45). Screw the plug into the outlet manifold (17) and torque to 15-20 ft-lb (21-27 N•m).

6. Install a black o-ring (41) on the plug (45). Screw the plug into the inlet manifold (17) and torque to 15-20 ft-lb (21-27 N•m).

7. Ensure that the collars (13) are in place in the coupling nut (14).

8. Place a 3/4 in. wrench on the flats of the slider piston (9), to keep it from turning when you are tightening the coupling nut (14). Orient the wrench so it is braced against one of the tie rods (3) or pump stand. Tighten the coupling nut (14) onto the slider piston (9) and torque to 75-80 ft-lb (102-108 N•m).

9. Install the shields (72) by engaging the bottom lips with the groove in the wet-cup cap. Snap the two shields together.

10. Turn on power and jog the motor to bring the other drive to the bottom of its stroke. Repeat procedure to connect the other lower.

NOTE: Update the drive software to reflect the change in size of the lowers. See manual 311596.

11. Flush and test the pump before reinstalling it in the system. Connect hoses and flush the pump. While it is pressurized, check for smooth operation and leaks. Adjust or repair as necessary before reinstalling in the system.

4 Torque to 50-60 ft-lb (68-80 N•m).

5 Torque to 75-80 ft-lb (102-108 N•m).

7 Torque to 15-20 ft-lb (21-27 N•m).

14 Apply lithium grease.

15 On pumps without a sensor circuit, install a plug (45) instead of the transducer (25a),

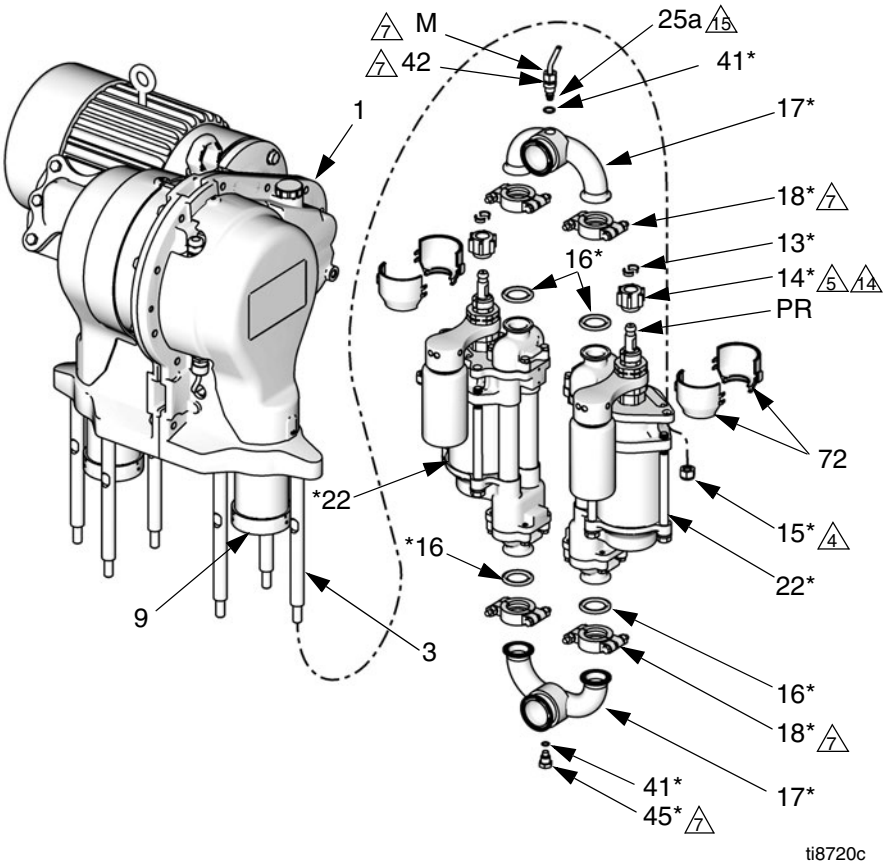

FIG. 2: Fluid Section

Graco Standard Warranty

Graco warrants all equipment referenced in this document which is manufactured by Graco and bearing its name to be free from defects in material and workmanship on the date of sale to the original purchaser for use. With the exception of any special, extended, or limited warranty published by Graco, Graco will, for a period of twelve months from the date of sale, repair or replace any part of the equipment determined by Graco to be defective. This warranty applies only when the equipment is installed, operated and maintained in accordance with Graco's written recommendations.

This warranty does not cover, and Graco shall not be liable for general wear and tear, or any malfunction, damage or wear caused by faulty installation, misapplication, abrasion, corrosion, inadequate or improper maintenance, negligence, accident, tampering, or substitution of non-Graco component parts. Nor shall Graco be liable for malfunction, damage or wear caused by the incompatibility of Graco equipment with structures, accessories, equipment or materials not supplied by Graco, or the improper design, manufacture, installation, operation or maintenance of structures, accessories, equipment or materials not supplied by Graco.

This warranty is conditioned upon the prepaid return of the equipment claimed to be defective to an authorized Graco distributor for verification of the claimed defect. If the claimed defect is verified, Graco will repair or replace free of charge any defective parts. The equipment will be returned to the original purchaser transportation prepaid. If inspection of the equipment does not disclose any defect in material or workmanship, repairs will be made at a reasonable charge, which charges may include the costs of parts, labor, and transportation.

THIS WARRANTY IS EXCLUSIVE, AND IS IN LIEU OF ANY OTHER WARRANTIES, EXPRESS OR IMPLIED, INCLUDING BUT NOT LIMITED TO WARRANTY OF MERCHANTABILITY OR WARRANTY OF FITNESS FOR A PARTICULAR PURPOSE.

Graco's sole obligation and buyer's sole remedy for any breach of warranty shall be as set forth above. The buyer agrees that no other remedy (including, but not limited to, incidental or consequential damages for lost profits, lost sales, injury to person or property, or any other incidental or consequential loss) shall be available. Any action for breach of warranty must be brought within two (2) years of the date of sale.

GRACO MAKES NO WARRANTY, AND DISCLAIMS ALL IMPLIED WARRANTIES OF MERCHANTABILITY AND FITNESS FOR A PARTICULAR PURPOSE, IN CONNECTION WITH ACCESSORIES, EQUIPMENT, MATERIALS OR COMPONENTS SOLD BUT NOT MANUFACTURED BY GRACO. These items sold, but not manufactured by Graco (such as electric motors, switches, hose, etc.), are subject to the warranty, if any, of their manufacturer. Graco will provide purchaser with reasonable assistance in making any claim for breach of these warranties.

In no event will Graco be liable for indirect, incidental, special or consequential damages resulting from Graco supplying equipment hereunder, or the furnishing, performance, or use of any products or other goods sold hereto, whether due to a breach of contract, breach of warranty, the negligence of Graco, or otherwise.

FOR GRACO CANADA CUSTOMERS
The Parties acknowledge that they have required that the present document, as well as all documents, notices and legal proceedings entered into, given or instituted pursuant hereto or relating directly or indirectly hereto, be drawn up in English. Les parties reconnaissent avoir convenu que la rédaction du présente document sera en Anglais, ainsi que tous documents, avis et procédures judiciaires exécutés, donnés ou intentés, à la suite de ou en rapport, directement ou indirectement, avec les procédures concernées.

Graco Information

For the latest information about Graco products, visit www.graco.com.

TO PLACE AN ORDER, contact your Graco distributor or call to identify the nearest distributor.
Phone: 612-623-6921 **or Toll Free:** 1-800-328-0211 **Fax:** 612-378-3505

All written and visual data contained in this document reflects the latest product information available at the time of publication. Graco reserves the right to make changes at any time without notice.

Original instructions. This manual contains English. MM 311611

Graco Headquarters: Minneapolis
International Offices: Belgium, China, Japan, Korea

GRACO INC. P.O. BOX 1441 MINNEAPOLIS, MN 55440-1441

www.graco.com
Revised 07/2011