Air Saving Valve

ASR Series *ASQ* Series

Pressure Valve Flow Valve

40% reduction in air consumption

Cuts air consumption by operating the return stroke at a reduced pressure.

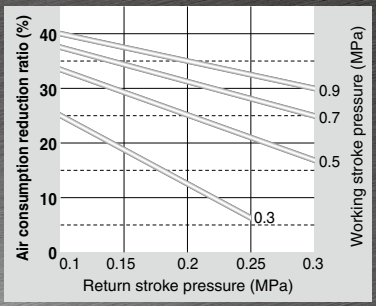

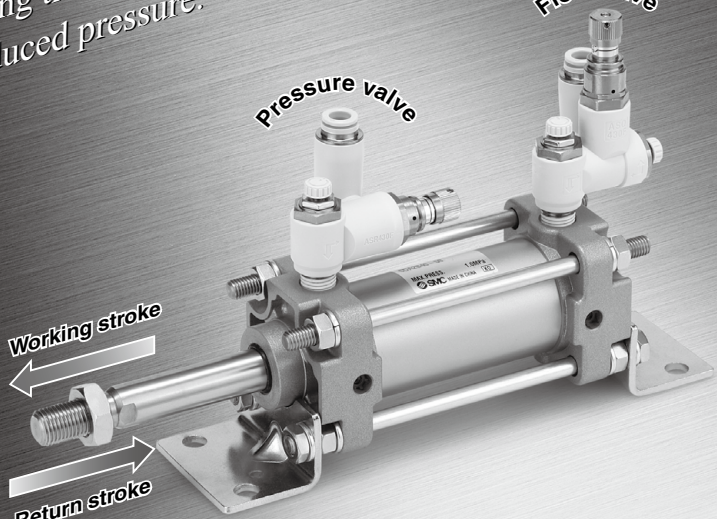

Pressure valve

Flow valve

Cuts air consumption by operating the return stroke at a reduced pressure.

Current valve

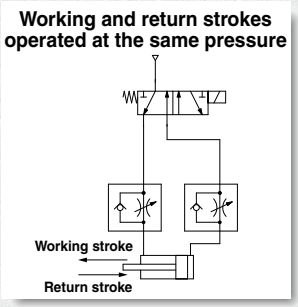

Air saving valve

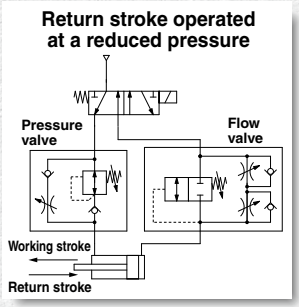

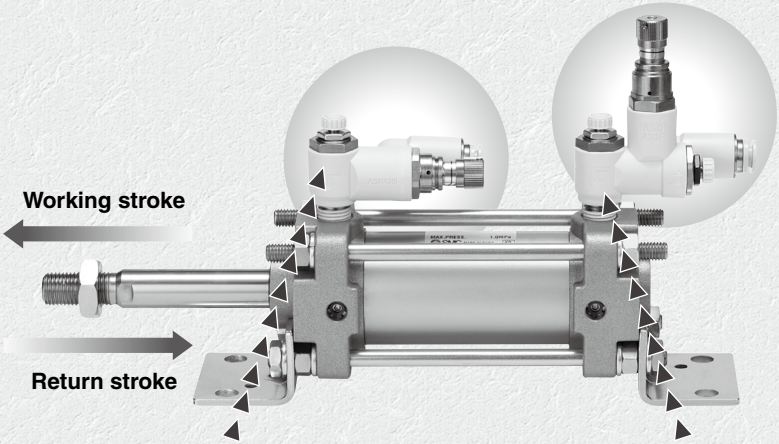

Pressure valve

Regulator with check valve
+
Speed controller

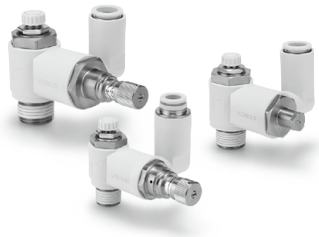

***ASR* Series**

Flow valve

Quick supply and exhaust valve
+
Speed controller
(Meter-in, Meter-out)

***ASQ* Series**

Smooth operation of working and return strokes possible.

Consistent speed control achieved by preventing jerky movement of working strokes.

Improved response time

Operation delay in a return stroke is reduced by the use of a quick supply and exhaust valve.

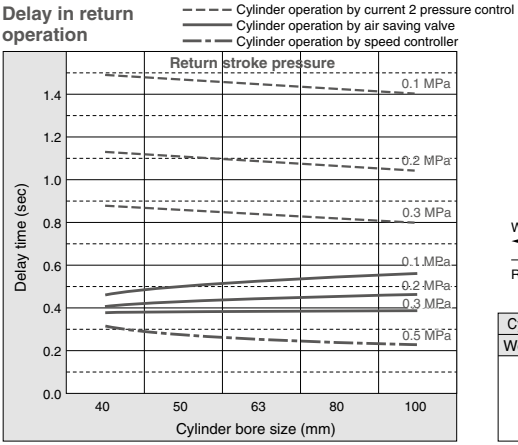

Cylinder speed: 200 mm/sec
Cylinder stroke: 200 mm

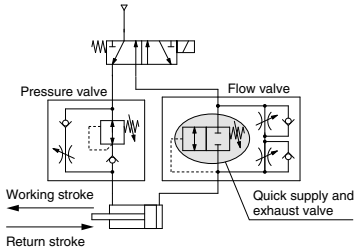

Cylinder operating pressure (MPa)		Air consumption reduction ratio (%)
Working stroke	Return stroke	
0.5	0.5	0
	0.3	17
	0.2	25
	0.1	33

Easy piping

The body and One-touch fitting allow 360° rotation. The sealant on the male thread is standardized.

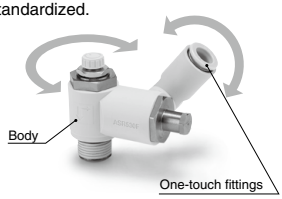

The set pressure can be either fixed or variable.

Fixed set pressure type
(Fixed at 0.2 MPa)

Variable set pressure type
(Variable between 0.1 and 0.3 MPa)

Graduated knob

Pressure valve **Flow valve** **Pressure valve** **Flow valve**

A knob cap is attached to the variable set pressure type.

Other applications

Jerk prevention in vertical operation of the cylinder

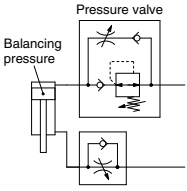

Quick air charge at the end of stroke for press applications

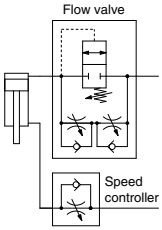

Series Variations

Model		Port size	Applicable tubing O.D. (mm)			
Pressure valve	Flow valve		6	8	10	12
ASR430F-02	ASQ430F-02	R1/4	●	●	●	
ASR530F-02	ASQ530F-02	R1/4	●	●	●	●
ASR530F-03	ASQ530F-03	R3/8	●	●	●	●
ASR630F-03	ASQ630F-03	R3/8			●	●
ASR630F-04	ASQ630F-04	R1/2			●	●

Air Saving Valve
Pressure Valve Flow Valve
ASR Series/ASQ Series

Pressure valve: ASR series

Regulator with check valve and flow control valve integrated into a single construction

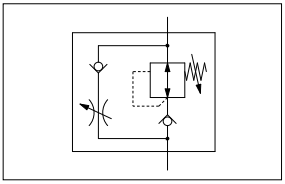

Flow valve: ASQ series

Pilot valve and two-way flow control valve integrated into a single construction

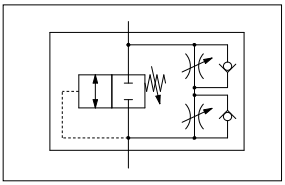

How to Order

ASR 4 3 0 F – 02 – 06 S – F20 – ☐

Model

ASR	Pressure valve
ASQ	Flow valve

Body size

4	1/4 standard
5	3/8 standard
6	1/2 standard

Type

3	Universal

With One-touch fitting

Port size

02	R1/4
03	R3/8
04	R1/2

Applicable tubing O.D.

06	6 mm
08	8 mm
10	10 mm
12	12 mm

With seal

Option

Nil	Variable set pressure type (0.1 to 0.3 MPa)
F20	Fixed set pressure type (0.2 MPa)

Lock nut option

Nil	Hexagon lock nut
J	Round lock nut

Model

Model		Port size	Applicable tubing O.D. (mm)			
Pressure valve	Flow valve		6	8	10	12
ASR430F-02	ASQ430F-02	R1/4	●	●	●	
ASR530F-02	ASQ530F-02	R1/4	●	●	●	●
ASR530F-03	ASQ530F-03	R3/8	●	●	●	●
ASR630F-03	ASQ630F-03	R3/8			●	●
ASR630F-04	ASQ630F-04	R1/2			●	●

Specifications

Fluid		Air
Proof pressure		1.5 MPa
Maximum operating pressure		1.0 MPa
Set pressure range	**Variable**	0.1 to 0.3 MPa
	Fixed (option)	0.2 MPa
Ambient and fluid temperature		–5 to 60°C (with no freezing)
Applicable tubing material		Nylon, Soft nylon, Polyurethane

Effective Area

Pressure Valve: ASR Series

Type	Free flow		Controlled flow	
	Sonic conductance dm³/(s·bar)	Critical pressure ratio	Sonic conductance dm³/(s·bar)	Critical pressure ratio
ASR430F-02-06S(-F20)	1	0.2	1.1	0.25
ASR430F-02-08S(-F20)	1.1		1.2	
ASR430F-02-10S(-F20)	1.1		1.2	
ASR530F-02-06S(-F20)	1.3		1.5	
ASR530F-02-08S(-F20)	1.6		2.1	
ASR530F-02-10S(-F20)	1.7		2.4	
ASR530F-02-12S(-F20)	1.7		2.5	
ASR530F-03-06S(-F20)	1.3		1.5	
ASR530F-03-08S(-F20)	1.6		2.1	
ASR530F-03-10S(-F20)	1.7		2.4	
ASR530F-03-12S(-F20)	1.7		2.5	
ASR630F-03-10S(-F20)	2.8		3.2	
ASR630F-03-12S(-F20)	2.9		3.5	
ASR630F-04-10S(-F20)	2.8		3.2	
ASR630F-04-12S(-F20)	2.9		3.5	

Flow Valve: ASQ Series

Type	Meter-out		Meter-in	
	Sonic conductance dm³/(s·bar)	Critical pressure ratio	Sonic conductance dm³/(s·bar)	Critical pressure ratio
ASQ430F-02-06S(-F20)	0.7	0.2	0.9	0.25
ASQ430F-02-08S(-F20)	0.8		1	
ASQ430F-02-10S(-F20)	0.8		1	
ASQ530F-02-06S(-F20)	1.2		1.4	
ASQ530F-02-08S(-F20)	1.7		1.8	
ASQ530F-02-10S(-F20)	1.8		2	
ASQ530F-02-12S(-F20)	2		2.1	
ASQ530F-03-06S(-F20)	1.2		1.4	
ASQ530F-03-08S(-F20)	1.7		1.8	
ASQ530F-03-10S(-F20)	1.8		2	
ASQ530F-03-12S(-F20)	2		2.1	
ASQ630F-03-10S(-F20)	2.8		3.1	
ASQ630F-03-12S(-F20)	3		3.3	
ASQ630F-04-10S(-F20)	2.8		3.1	
ASQ630F-04-12S(-F20)	3		3.3	

Operating Principle

Working Stroke

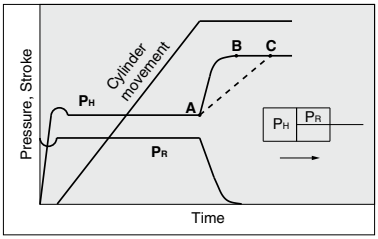

1. The cylinder starts smoothly because jerks are prevented by meter-in control.

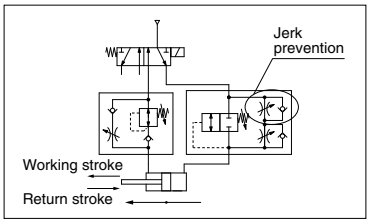

2. When the cylinder reaches the stroke end, the quick air charge by the flow valve rapidly increases the rear side pressure (PH) from **A** to **B**. If a speed controller is used instead of the flow valve, charging air will take more time as illustrated by line **A-C**, causing delay in the pressure rise.

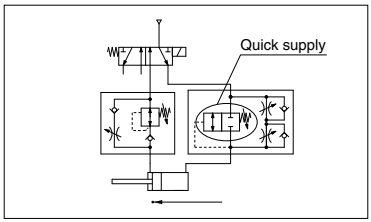

Return Stroke

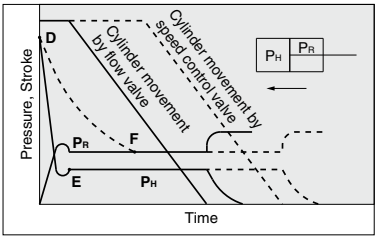

3. To prevent delay due to the pressure gap, air is rapidly exhausted to decrease the pressure from **D** to **E**, after which the piston moves at a constant speed. If a speed controller is used instead of the flow valve, exhausting air will take more time as illustrated by line **D-F**, resulting in longer stop time of the cylinder and a consequent time loss.

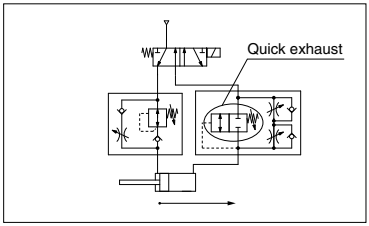

4. The cylinder operates at a low pressure required for a return.

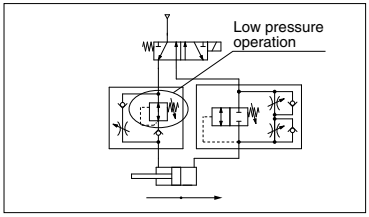

Flow Rate Characteristics

Note) The flow rate characteristics are representative values.

Pressure Valve: ASR Series (Inlet pressure: 0.5 MPa)

ASR430F

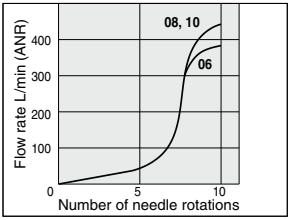

ASR530F

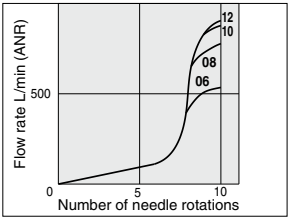

ASR630F

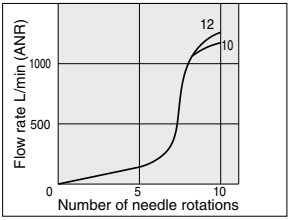

Flow Valve: ASQ Series

Meter-out Type (Inlet pressure: 0.3 MPa)

ASQ430F

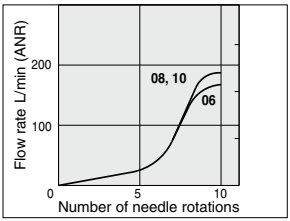

ASQ530F

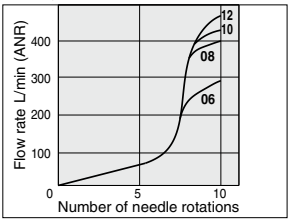

ASQ630F

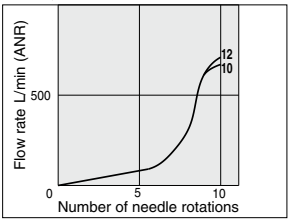

Meter-in Type (Inlet Pressure: 0.5 MPa)

ASQ430F

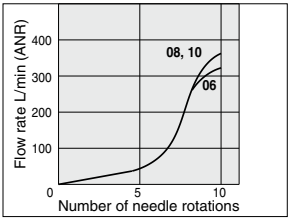

ASQ530F

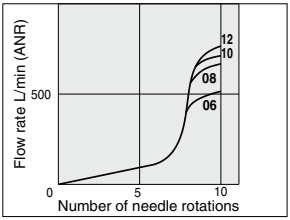

ASQ630F

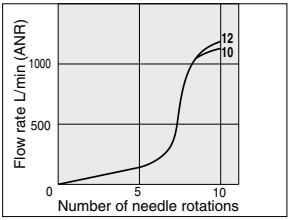

Pressure Characteristics (ASR)

ASR430F, ASR530F

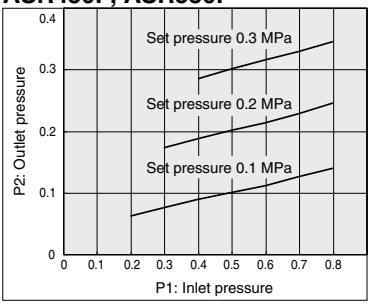

ASR630F

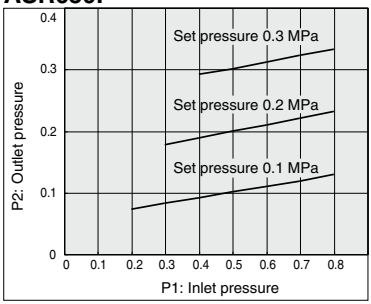

Selection and Adjustment

Install a flow valve on the working side which requires the cylinder output and a pressure valve on the return side. The product cannot be used in cases where the same pressure is necessary for both working and return strokes.
In such cases use a speed controller.

Horizontal mounting

Low pressure side: Pressure valve
High pressure side: Flow valve

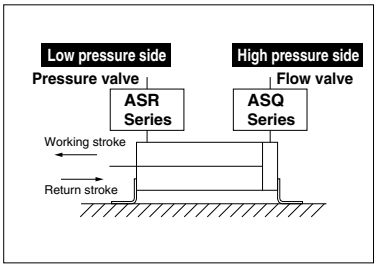

Refer to
Adjustment Procedure 1
for pressure and speed adjustment.

Vertical mounting

Low pressure side: Pressure valve
High pressure side: Flow valve

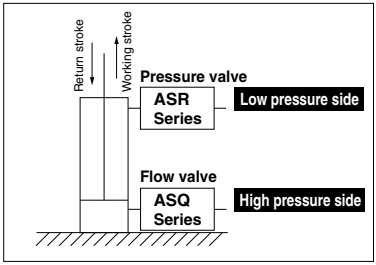

In case the load ratio is 50% or lower at the set pressure of the flow valve:

Refer to
Adjustment Procedure 1
for pressure and speed adjustment.

If the load ratio at the set pressure of the flow valve exceeds 50%, install a dual speed controller (meter-in and meter out control) on the high pressure side.

Low pressure side: Pressure valve
High pressure side: Dual speed controller

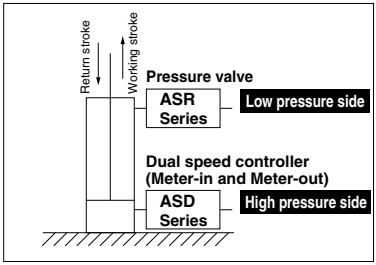

Refer to
Adjustment Procedure 2
for pressure and speed adjustment.

Adjustment Procedure 1

Pressure Adjustment

1. The fixed set pressure type (-F20) does not require adjustment because the pressure is fixed at 0.2 MPa for both the pressure valve and the flow valve.
2. The set pressures of the variable set pressure type pressure valve and flow valve are adjusted with knob Ⓐ and knob Ⓑ respectively. Turn the knob clockwise to increase the pressure and counterclockwise to decrease the pressure.
3. The graduations 1, 2 and 3 correspond to 0.1, 0.2 and 0.3 MPa respectively. Align the bottom end of the knob with the graduated line for adjustment.

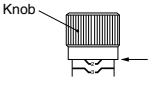

4. Set the same pressure for the pressure valve and the flow valve (0.2 MPa as the recommended value).
5. The inlet side should be supplied with a pressure which is higher than the set pressure by 0.1 MPa or more.
6. Cap the valve after adjustment.

Speed Control

1. The cylinder speed is adjusted with knobs Ⓒ, Ⓓ and Ⓔ. First have all the knobs fully closed and then open them gradually for adjustment. Turn the knob clockwise to close (decrease the speed of the piston rod) and counterclockwise to open (increase the speed of the piston rod).
2. Speed adjustment for the working stroke
   The speed is adjusted with the pressure valve and the flow valve.
   Open knobs Ⓒ and Ⓔ gradually until the required speed is achieved. Make sure that knobs Ⓒ and Ⓔ are opened by the same number of rotations.
   Note 1) If the piston rod jerks, close knob Ⓔ until the smooth operation is achieved.
3. Speed adjustment for return stroke
   The speed is adjusted with the flow valve.
   Open knob Ⓓ gradually until the required speed is achieved.
4. Be sure to tighten the lock nut after adjustment.

Pressure Valve: ASR Series

Flow Valve: ASQ Series

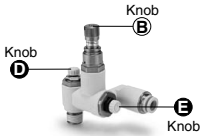

Adjustment Procedure 2

Pressure Adjustment

1. The fixed set pressure type (-F20) does not require adjustment because the pressure is fixed at 0.2 MPa.
2. The pressure at the low pressure side (return stroke side) is adjusted by the pressure valve.
3. The set pressure is adjusted with knob Ⓐ. Turn the knob clockwise to increase the pressure and counterclockwise to decrease the pressure.
4. The graduations 1, 2 and 3 correspond to 0.1, 0.2 and 0.3 MPa respectively. Align the bottom end of the knob with the graduated line for adjustment.
5. Keep the set pressure as low as possible in order to achieve good air saving effect.
6. Cap the valve after adjustment.

Speed Control

1. The cylinder speed is adjusted with knobs Ⓒ, Ⓕ and Ⓖ. First have all the knobs fully closed and then open them gradually for adjustment. Turn the knob clockwise to close (decrease the speed of the pistoin rod) and counterclockwise to open (increase the speed of the piston rod).
2. Speed adjustment for the working stroke
   The speed is adjusted with the pressure valve and the dual speed controller.
   Open knobs Ⓒ and Ⓖ gradually until the required speed is achieved. Make sure that knobs Ⓒ and Ⓖ are opened by the same number of rotations.
   Note 1) If the piston rod jerks, close knob Ⓖ until the smooth operation is achieved.
3. Speed adjustment for return stroke
   The speed is adjusted with the dual speed controller.
   Open knob Ⓕ gradually until the required speed is achieved.
4. Be sure to tighten the lock nut after adjustment.

Pressure Valve: ASR Series

Dual Speed Controller: ASD Series

Construction

Pressure Valve: ASR Series

Variable type

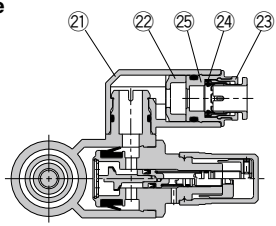

Fixed type

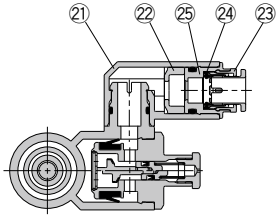

ASR430F-02 type
ASR530F-03 type
ASR630F-04 type

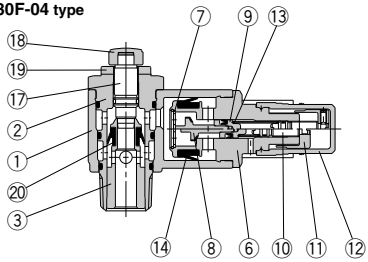

ASR430F-02 type
ASR530F-03 type
ASR630F-04 type

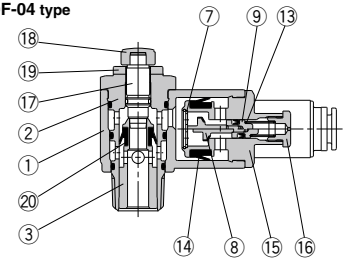

ASR530F-02 type
ASR630F-03 type

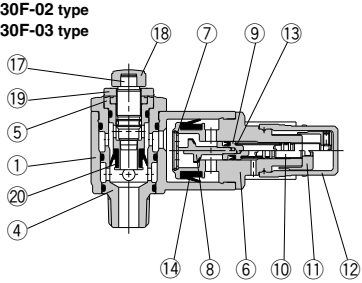

ASR530F-02 type
ASR630F-03 type

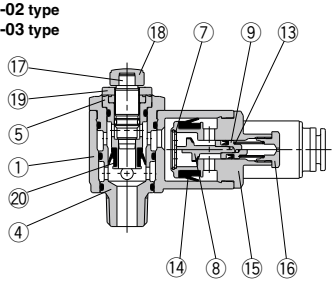

Component Parts

No.	Description	Material	Note
1	**Body A**	PBT	
2	**Body B**	Brass	Electroless nickel plated
3	**Seat ring**	Brass	Electroless nickel plated
4	**Body B1**	Brass	Electroless nickel plated
5	**Body B2**	Brass	Electroless nickel plated
6	**Body C**	Brass	Electroless nickel plated
7	**Stopper**	Stainless steel	
8	**Valve**	HNBR/Brass	
9	**Piston**	Brass	
10	**Adjustment screw**	Brass	Electroless nickel plated
11	**Knob**	Brass	Electroless nickel plated
12	**Cap**	Polypropylene	
13	**Adjustment spring**	Steel wire	

No.	Description	Material	Note
14	**U seal**	HNBR	
15	**Body C**	Brass	Electroless nickel plated
16	**Adjustment plug**	Brass	Electroless nickel plated
17	**Needle**	Brass	Electroless nickel plated
18	**Knob**	PBT	
19	**Lock nut**	Steel (3)	Zinc chromated (3)
20	**U seal**	HNBR	
21	**Elbow body**	PBT	
22	**Spacer** (1)	PBT	
23	**Cassette**	—	
24	**Seal**	NBR	
25	**Drive body** (2)	Brass	Electroless nickel plated

Note 1) Not used for ø6 and ø8.
Note 2) Not used for ø10 and ø12.
Note 3) The material and surface treatment of the lock nut option-J (round type) is brass and electroless nickel plating, respectively. However, note that only the ASR430F uses steel and electroless nickel plating.

Flow Valve: ASQ Series

Variable type

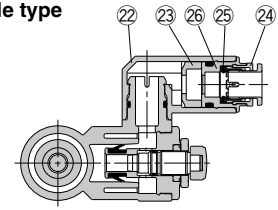

ASQ430F-02 type
ASQ530F-03 type
ASQ630F-04 type

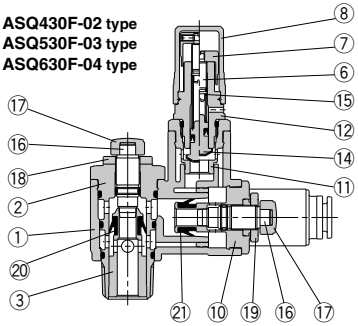

ASQ530F-02 type
ASQ630F-03 type

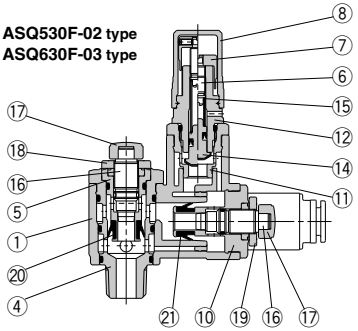

Fixed type

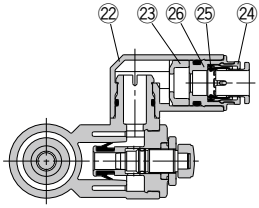

ASQ430F-02 type
ASQ530F-03 type
ASQ630F-04 type

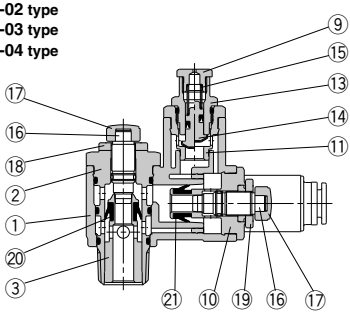

ASQ530F-02 type
ASQ630F-03 type

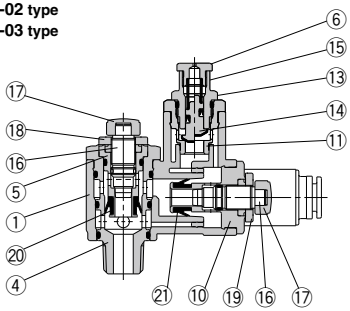

Component Parts

No.	Description	Material	Note
1	Body A	PBT	
2	Body B	Brass	Electroless nickel plated
3	Seat ring	Brass	Electroless nickel plated
4	Body B1	Brass	Electroless nickel plated
5	Body B2	Brass	Electroless nickel plated
6	Adjustment screw	Brass	Electroless nickel plated
7	Knob	Brass	Electroless nickel plated
8	Cap	Polypropylene	
9	Adjustment plug	Brass	Electroless nickel plated
10	Body C	Brass	Electroless nickel plated
11	Body D1	Brass	Electroless nickel plated
12	Body D2	Brass	Electroless nickel plated
13	Body D3	Brass	Electroless nickel plated

No.	Description	Material	Note
14	Piston valve	HNBR/Brass	
15	Adjustment spring	Steel wire	
16	Needle	Brass	Electroless nickel plated
17	Knob	PBT	
18	Lock nut	Steel (3)	Zinc chromated (3)
19	Lock nut	Steel (3)	Black zinc chromated
20	U seal	HNBR	
21	U seal	HNBR	
22	Elbow body	PBT	
23	Spacer (1)	PBT	
24	Cassette	—	
25	Seal	NBR	
26	Drive body (2)	Brass	Electroless nickel plated

Note 1) Not used for ø6 and ø8.
Note 2) Not used for ø10 and ø12.
Note 3) The material and surface treatment of the lock nut option-J (round type) is brass and electroless nickel plating, respectively. However, note that only the ASQ430F uses steel and electroless nickel plating.

Dimensions

Pressure Valve: ASR Series

Variable set pressure type

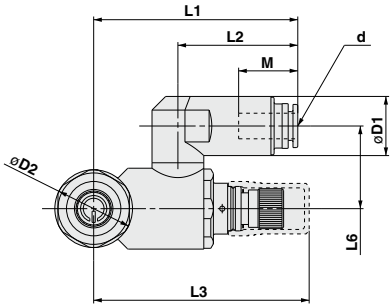

Fixed set pressure type (-F20)

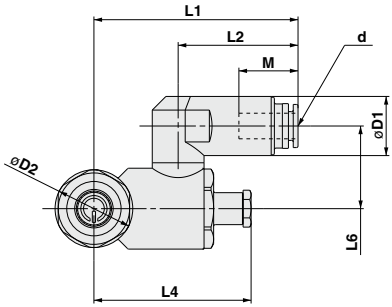

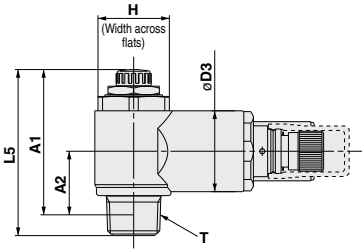

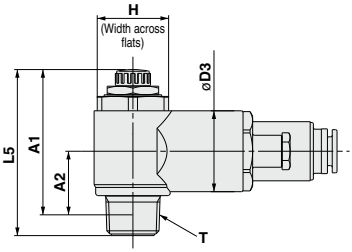

Model	d (1)	T	H	D1	D2	D3	L1	L2	L3 (2)	L4 (3)	L5 (4)		L6	A1 (5)		A2 (5)	M	Weight (g) (6)	
											Max.	Min.		Max.	Min.			*1	*2
ASR430F-02-06S,-F20	6	R1/4	17	18.5	20	21.5	57.7	34.9	63.7	45.6	50.6	45.6	23	44.6	39.6	16.8	17	111	89
ASR430F-02-08S,-F20	8						58.7	35.9									18.5	114	93
ASR430F-02-10S,-F20	10						53.8	31									21	105	82
ASR530F-02-06S,-F20	6	R1/4	21	18.5	24.3	25.3	62.9	36.5	67.3	49.2	55.8	50.8	25.9	49.8	44.8	18.8	17	150	127
ASR530F-02-08S,-F20	8						63.9	37.5									18.5	153	130
ASR530F-02-10S,-F20	10						59	32.6									21	143	120
ASR530F-02-12S,-F20	12			20.9			60.8	34.4									22	146	122
ASR530F-03-06S,-F20	6	R3/8	21	18.5	24.3	25.3	62.9	36.5	67.3	49.2	57.4	52.4	25.9	51	46	20	17	160	137
ASR530F-03-08S,-F20	8						63.9	37.5									18.5	163	140
ASR530F-03-10S,-F20	10						59	32.6									21	153	130
ASR530F-03-12S,-F20	12			20.9			60.8	34.4									22	156	133
ASR630F-03-10S,-F20	10	R3/8	25	18.5	29.7	30	62.8	32.6	86.3	65.5	67.6	60.1	27.7	61.2	53.7	20.6	21	237	219
ASR630F-03-12S,-F20	12			20.9			64.6	34.4									22	239	221
ASR630F-04-10S,-F20	10	R1/2	25	18.5	29.7	30	62.8	32.6	86.3	65.5	71.1	63.6	27.7	62.9	55.4	24.1	21	257	239
ASR630F-04-12S,-F20	12			20.9			64.6	34.4									22	259	239

Note 1) "d" indicates the applicable tubing O.D.
Note 2) L3 is the dimension for the variable set pressure type.
Note 3) L4 is the dimension for the fixed set pressure type.
Note 4) Reference dimensions
Note 5) A1 and A2 are reference dimensions after installation.
Note 6) *1 is the weight for the variable set pressure type and *2 is that for the fixed set pressure type.

Flow Valve: ASQ Series

Variable set pressure type

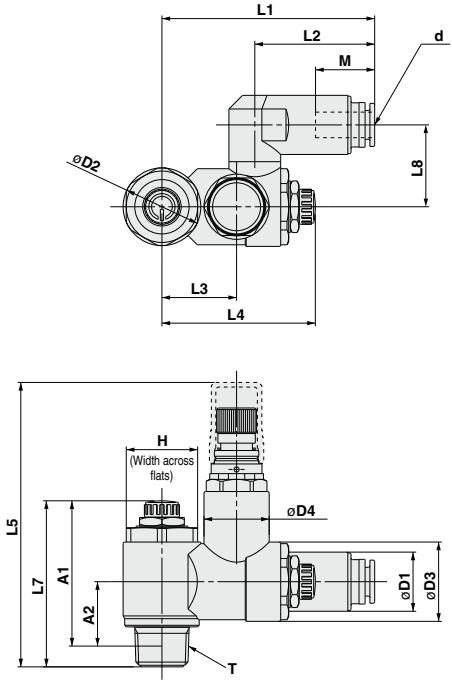

Fixed set pressure type

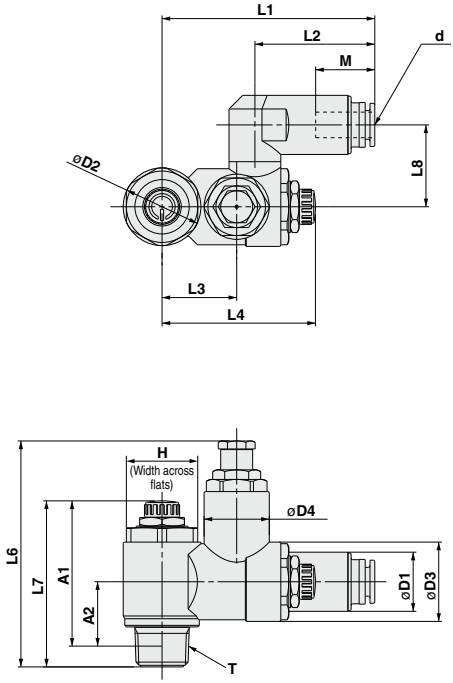

Model	d (1)	T	H	D1	D2	D3	D4	L1	L2	L3	L4 (2) Max.	L4 (2) Min.	L5 (3)	L6 (4)	L7 (2) Max.	L7 (2) Min.	L8	A1 (5) Max.	A1 (5) Min.	A2 (5)	M	Weight (g) (6) *1	Weight (g) (6) *2
ASQ430F-02-06S,-F20	6	R1/4	17	18.5	20	21.5	19.5	61.6	34.9	20.3	49.4	44.4	88.8	68.7	50.6	45.6	23	44.6	39.6	17.9	17	136	114
ASQ430F-02-08S,-F20	8							62.6	35.9												18.5	139	117
ASQ430F-02-10S,-F20	10							57.7	31												21	130	108
ASQ530F-02-06S,-F20	6	R1/4	21	18.5	24.3	24.8	20.4	65.6	36.5	23.4	53.5	48.5	92.2	72	55.8	50.8	25.6	49.8	44.8	19	17	178	155
ASQ530F-02-08S,-F20	8							66.6	37.5												18.5	181	158
ASQ530F-02-10S,-F20	10							61.7	32.6												21	172	149
ASQ530F-02-12S,-F20	12			20.9				63.5	34.4												22	174	151
ASQ530F-03-06S,-F20	6	R3/8	21	18.5	24.3	24.8	20.4	65.6	36.5	23.4	53.5	48.5	93.8	73.6	57.4	52.4	25.6	51	46	20.2	17	188	165
ASQ530F-03-08S,-F20	8							66.6	37.5												18.5	191	168
ASQ530F-03-10S,-F20	10							61.7	32.6												21	182	159
ASQ530F-03-12S,-F20	12			20.9				63.5	34.4												22	184	161
ASQ630F-03-10S,-F20	10	R3/8	25	18.5	29.7	30.7	30	74.8	32.6	30.8	74.3	66.8	107.9	86.9	67.6	60.1	28	61.2	53.7	20.8	21	310	292
ASQ630F-03-12S,-F20	12			20.9				76.6	34.4												22	312	294
ASQ630F-04-10S,-F20	10	R1/2	25	18.5	29.7	30.7	30	74.8	32.6	30.8	74.3	66.8	111.4	90.4	71.1	63.6	28	62.9	55.4	24.1	21	330	312
ASQ630F-04-12S,-F20	12			20.9				76.6	34.4												22	332	314

Note 1) "d" indicates the applicable tubing O.D..
Note 2) Reference dimensions
Note 3) L5 is the dimension for the variable set pressure type.
Note 4) L6 is the dimension for the fixed set pressure type.
Note 5) A1 and A2 are reference dimensions after installation.
Note 6) *1 is the weight for the variable set pressure type and *2 is that for the fixed set pressure type.

ASR/ASQ Series
Specific Product Precautions

Be sure to read this before handling the products. Refer to back page 50 for Safety Instructions and pages 543 to 546 for Flow Control Equipment Precautions.

Selection

⚠Warning

1. Keep the set pressure range of the outlet pressure of the pressure valve within 85% that of the inlet pressure.

If the value exceeds 85%, the outlet pressure may become unstable, affected by the fluctuation of the inlet pressure.

Installation

⚠Warning

1. The number of opening and closing rotations of the needle valve and adjustment screw should be adjusted within the range of the specifications.

Since it has a pull-out stop mechanism, it will not rotate past the limit. Confirm the number of rotations for the product being used, as excessive turning of the needle will cause damage.

2. The valve cannot be used if there are load fluctuations.

The piston rod may jerk during operation.

3. In case a closed-center solenoid valve is used, switch to the center position only after pressure charge inside the cylinder at the stroke end is completed.

If the pressure charge is insufficient, the piston rod may jerk after restart.

4. When the valve is used for an actuator operating vertically, the actuator may lurch depending on the load.

For the adjustment method, please refer to page 809.

Operating

⚠Caution

① The valve cannot be used if the same pressure is required for both the working and return strokes.
The pressure valve and flow valve are designed to save air by the difference in the operating pressure.

② Install a flow valve on the working side which requires the cylinder output and a pressure valve on the return side. The cylinder may not operate if the valves are installed on the wrong sides.

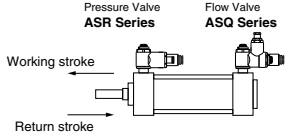

③ If a closed-center, exhaust-center, pressure-center or perfect solenoid valve is used and the solenoid valve is set at the center position, the cylinder may move to the position where the pressure balance and load balance are achieved.